SOLUM
Solution provider.

About
Newton Sub-Giga

2022 SOLUM PROPRIETARY AND CONFIDENTIAL

About SOLUM

SAMSUNG SOLUM

- As a spin-off company from Samsung, SOLUM has 45 years of wireless communication technology and system solution experience.
- SOLUM follows design, R&D, manufacturing and service program standard of SAMSUNG
- SOLUM technical excellence combined with proven product quality enabled us to lead worldwide innovation in ESL technology.

About SOLUM
Business History

With over 45 years experience,
we are leading the global ESL industry through the integration of technologies
that have been recognized worldwide

Start

1973	TV Tuner SET-top Box
1983	TV SMPS
1996	General Adapter Mobile Charger
2002	BT Module GPS Module

Develop

2008	WLAN Module
2010	**1st E-Paper ESL**
2012	Power + Driver for LED TV 1st Graphic ESL
2014	**3 Color Graphic ESL**
2015	SOLUM Spin – off from SAMSUNG

Growing

2016	LoRa Module GPS Tracker Item Label
2017	Bluetooth Item Finder Stripe Display
2018	3-Port Charger Air Quality Checker
2019	WBG Power Supply **MS #1 in North America in ESL**
2019	Newton Launching
2020	Newton LITE Launching
2022	**IPO in Korea, KOSPI**

2022 SOLUM PROPRIETARY AND CONFIDENTIAL

SOLUM
Solution provider.

About SOLUM

Integrated Solution Provider

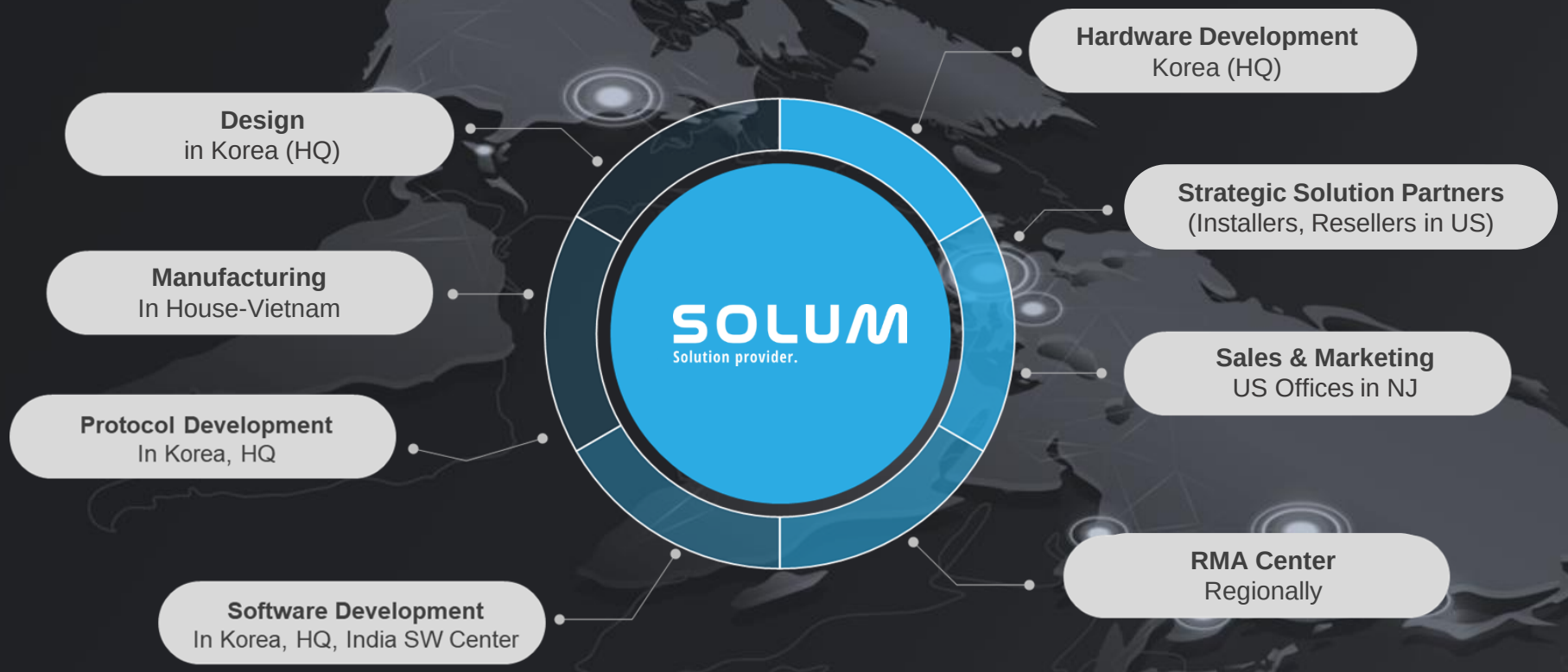

The strength of SOLUM is that we provide a fully integrated in-house solution.
We design, develop, and have our own in-house manufacturing to deliver the best in quality products.

© 2022 SOLUM PROPRIETARY AND CONFIDENTIAL

SOLUM
Solution provider.

About SOLUM
Vietnam Factory

Current production capacity of 6M/month
Increasing to 10M/month by the end of 2022.

2022 SOLUM PROPRIETARY AND CONFIDENTIAL

SOLUM
Solution provider.

About SOLUM

Financial Stability

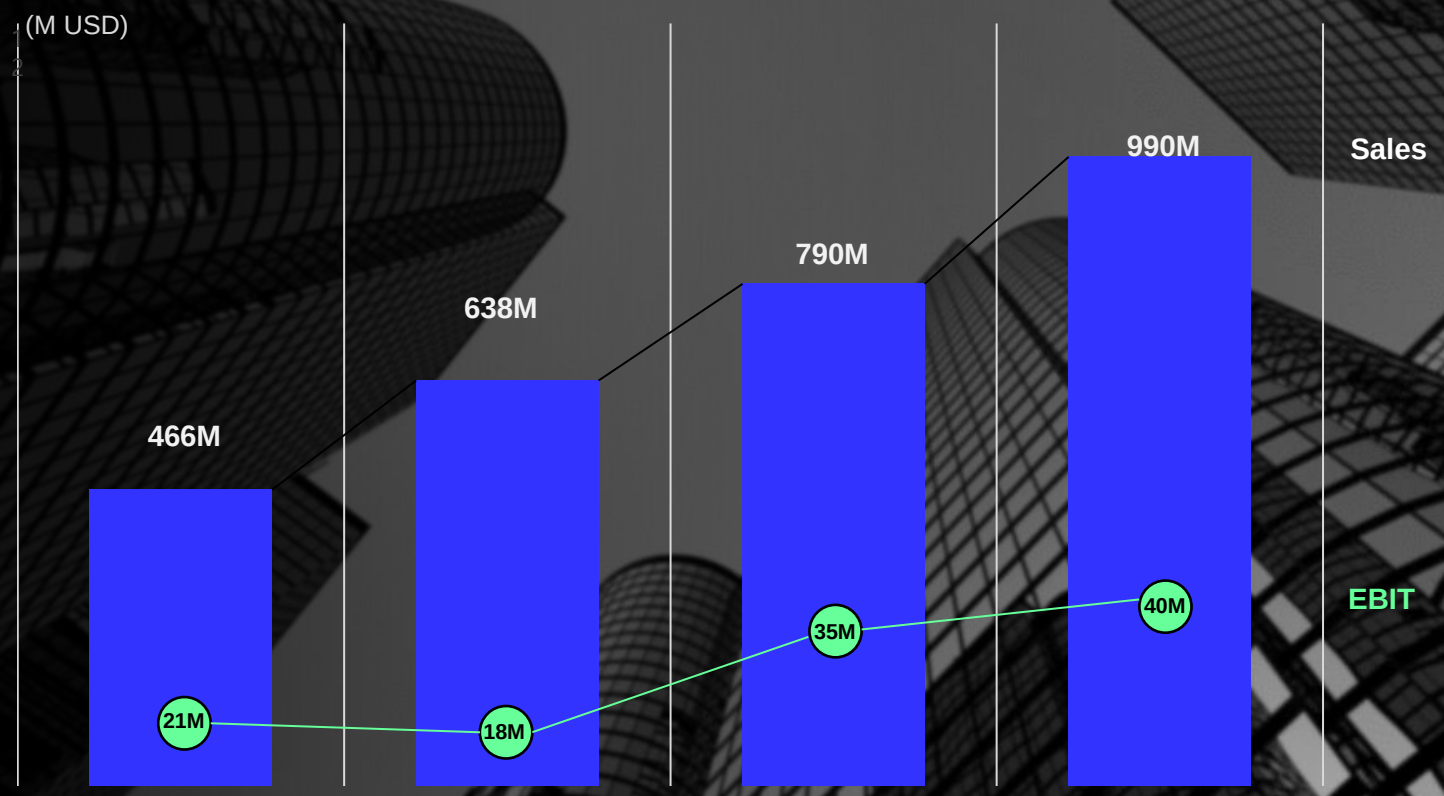

Mobile Charger
Power Module

Television Module

Electronic
Shelf Label

- SOLUM went to public at KOSPI(Korea stock exchange market) on Feb, 2022 and joined MSCI(Morgan Stanley Capital International's) Global Small Cap Korea Indexes on May, 2022.
- SOLUM has very strong business portfolio, mobile charger, television module business, power module, IoT device and Electronic Shelf Label.
- SOLUM has the global leading customers such as Samsung, Sony and Intel in modular business and REWE, Metro, Loblaw, Lowe's, Macy's and Alibaba in ESL business.
- The financial stability enables SOLUM to invest a huge amount of money on R&D every year which makes us to be the innovation leader in ESL market.

Rapid Growth and Global Deployment

SOLUM started supplying ESL to Global Top retailers such as LOWE'S, MACY'S, LOBLAW, ROGERS, ALTICE, IKEA, REWE, TESCO and METRO. Over the past 8 years, we have grown at a rapid pace and have now installed over 100 million ESLs throughout 35+ countries, totaling 8,000+ stores worldwide. We have gained a reputation as one of the best ESL vendors in all markets (grocery, department stores, electronics, factory, warehouse and apparel stores) with our server and management software solutions, diverse and differentiated product lineup, and prompt and active customer service.

86+
Million ESLs

in

8,000+
Store across 35+ countries

100 00
million illion
Target ESLs shipped by 2022

2022 SOLUM PROPRIETARY AND CONFIDENTIAL

SOLUM
Solution provider.

About SOLUM
Fast Growth

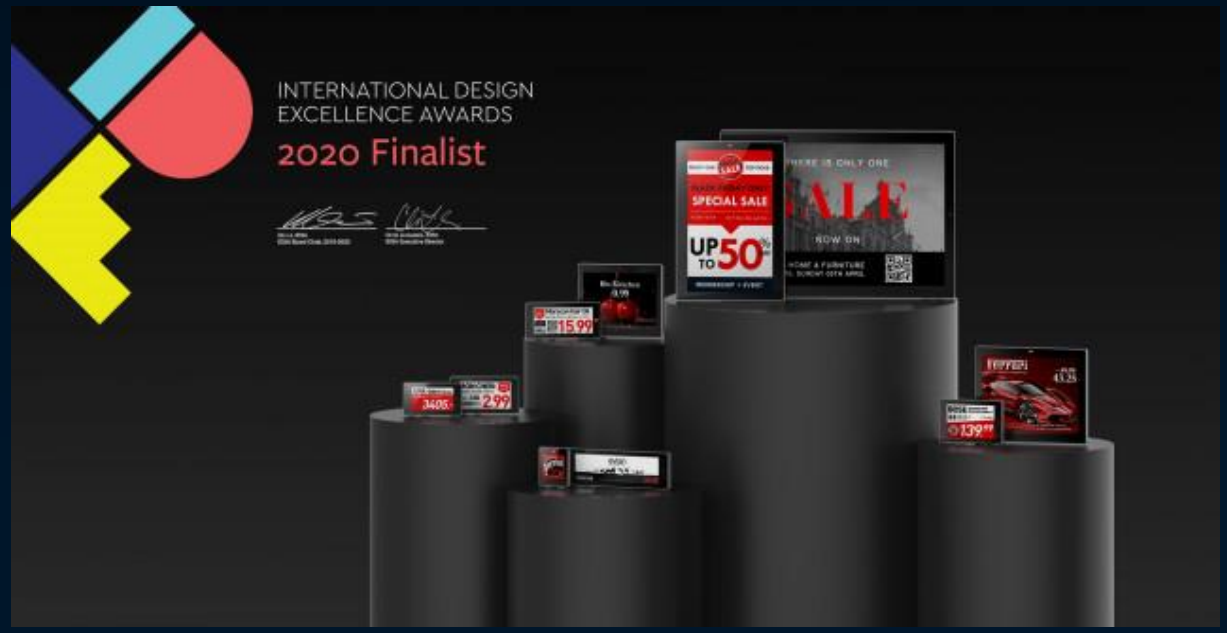

© 2022 SOLUM PROPRIETARY AND CONFIDENTIAL

SOLUM
Solution provider.

About SOLUM
Global Clients

RETAIL

LOWE'S, Loblaws, macy's, ROGERS, ShopRite, Angelo Caputo's, H-E-B, Clark's Market, Reliance, TESCO, BEER STORE, altice

LIDL, METRO, EDEKA, Carrefour, SPAR, Ahold Delhaize, albert, ESSELUNGA, coop, real-, KESKO, MediaMarkt, EURONICS

REWE, ALDI, Alibaba Group 阿里巴巴集团, CONAD, franprix, SIMPLY MARKET, M.Bugeo, K KOTTOSOLOIZ, expert, POWER, HOOGVLIET, KREFEL

MIGROS, POCO, maxima, WASGAU, Bonpreu, El Corte Inglés, blt, IPER, Dixons Carphone, FLANCO, ALTEX, LOTUS

AliExpress, mi, Dr.Max, XXL sports & outdoor, LIFE SUPERMARKET, KIM'S CLUB, Olé, Home plus, LOTTE Mart, LOTTE Super, LOTTE HIMART, LG전자, SAMSUNG Brand Store

GUCCI, NIKE, SEPHORA, DOUGLAS, AMOREPACIFIC, CHICOR, IKEA, orange, WMF, emart everyday, ORGA WHOLE FOODS, 농협 하나로마트

Industrial

SAMSUNG, BMW, VW, Audi, PORSCHE, LAMBORGHINI, DAIMLER, NEXEN, GM, GE, MITSUBISHI, TOYOTA BOSHOKU

ZF, faurecia, BOSCH Invented for life, Webasto, Deutsche Post DHL, BAYER, Coca-Cola, AGCO, CNH INDUSTRIAL, VARTA, AIRBUS

Office

SK, SAMSUNG, BlueOne

© 2022 SOLUM PROPRIETARY AND CONFIDENTIAL

SOLUM Solution provider.

Introducing SOLUM's ESL Made for Industry 4.0

Industrial applications rely on automation, feasibility and simplicity. Properties that ensure increased productivity.

This is the target of Newton Sub-Giga whether they are applied as display storage or in process flows.

Due to their high modularity and adaptability to industrial processes, the use cases are extremely various.

- ✔ Sub-Giga Protocol
- ✔ 7-Color LED
- ✔ Special 4.3" LED Picking Model
- ✔ NFC Capability
- ✔ Location-Based Service

© 2022 SOLUM PROPRIETARY AND CONFIDENTIAL

About Newton Sub-Giga

Sub-Giga Protocol

Newton increase the speed of business agility. To make it possible, Newton is also available in Sub-Giga.

This allows for long working range, low interference data transmission, fast updates and data exchange - making it an ideal IoT solution in extremely obstructed industrial environment.

Benefits of Newton Sub-Giga

- Low Interference
- Wider Signal Range
- Faster Display Update Time
- Shorter delta duration between ESL and POS
- Faster LED response for efficient Pick-by-Light and Put-by-Light applications

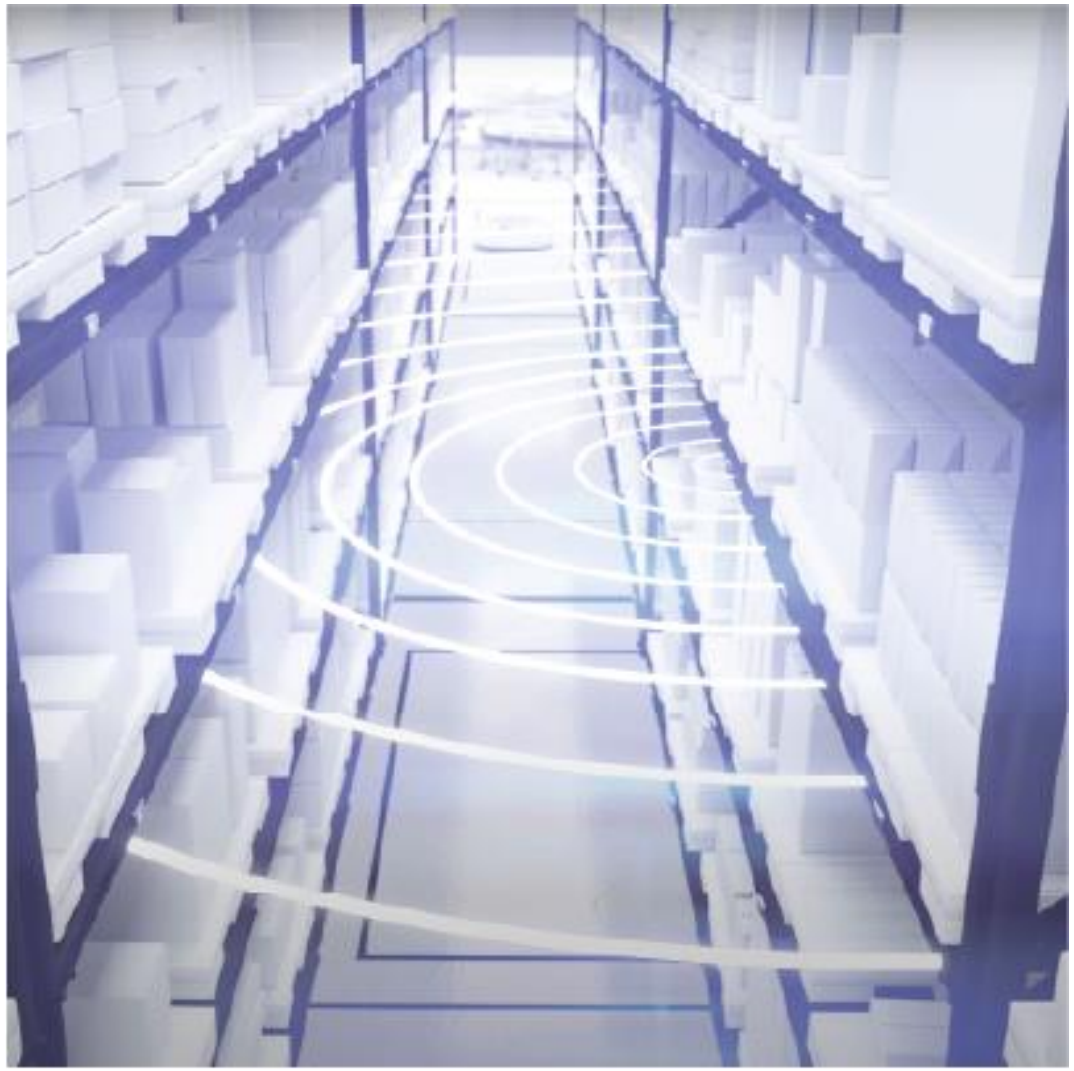

2022 SOLUM PROPRIETARY AND CONFIDENTIAL

SOLUM
Solution provider.

About Newton Sub-Giga

7 Colors LED

- Combine the fastest response time with LED blinking to minimize waiting time and maximize efficiency.
- Designate different LED colors to define specific instructions to the workers.
- 7 color options allows for more simultaneous use by color coding workers or staff.
- 180-degree LED viewing angle increases viewing range and allows customers to see if from the side.
- 1 hour usage a day still gives you 5 year life.
- LED patterns can be configured from the server for custom blinking.

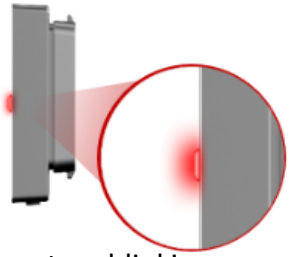

2022 SOLUM PROPRIETARY AND CONFIDENTIAL

SOLUM
Solution provider.

About Newton Sub-Giga

4.3” LED Picking

Built specially for the industrial environment, the 4.3” LED Picking is an ESL with Sub-Giga operating frequency, allowing for fast and continuous data transmission and low power consumption.

With three programmable buttons, 5-year battery life, and multi-color LED, this label enables smarter manufacturing and distribution processes.

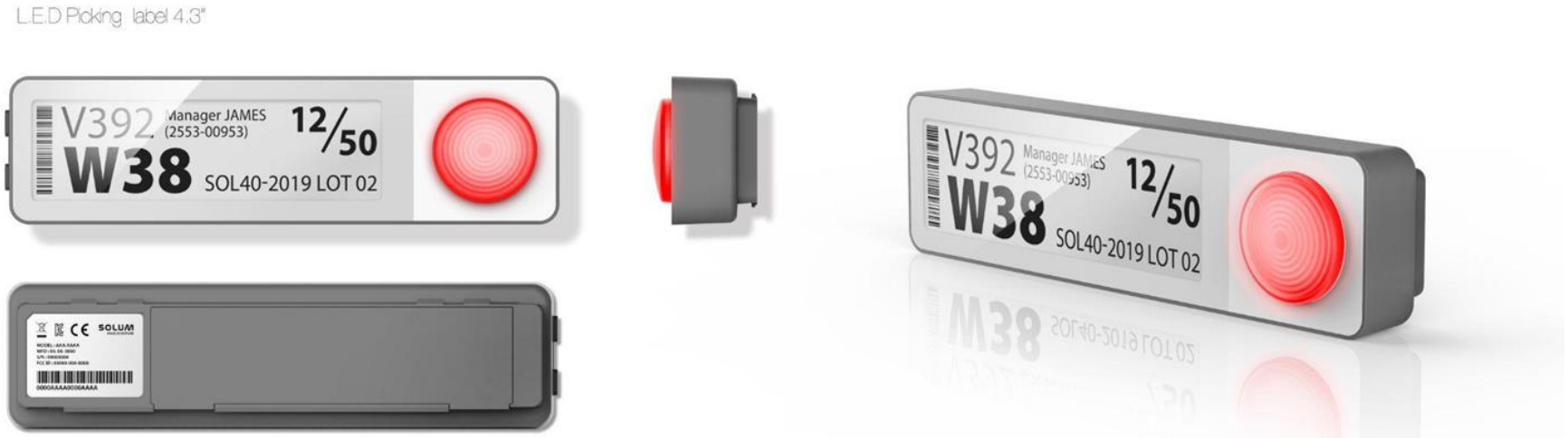

2022 SOLUM PROPRIETARY AND CONFIDENTIAL

SOLUM
Solution provider.

About Newton Sub-Giga

NFC

- Built-in NFC functionality for mobile device interaction
- Applications such as:
  - Machinery access rights control
  - Access control into restricted areas
  - Reading user manuals or emergency instructions
  - Products tracking throughout the facility

2022 SOLUM PROPRIETARY AND CONFIDENTIAL

SOLUM
Solution provider.

About Newton Sub-Giga

Location-Based Services

Track workers’ movements, shelf activityand moving equipment across your construction site or facility, no matter where they are.

© 2022 SOLUM PROPRIETARY AND CONFIDENTIAL

SOLUM
Solution provider.

SOLUM
Solution provider.

Major Global References in Industrial

- In 2017, SOLUM introduced the first Button and LED featured ESL for industrial market (manufacturing, warehouse, logistics etc) which gives bi-directional user interaction with shelf and worker. Newton with x10 time faster speed, geo-location and its security feature give more possibilities for industrial use cases.
- Global car manufacturers such as VW group, BMW and GM and leaders in other industrial sectors such as Coca-cola and SAMSUNG chose SOLUM ESL thanks to its performance, various features and reliability. They are already improving their operational efficiency and achieving their digital transformation using SOLUM ESL.

Appendix.
Product Specification

2022 SOLUM PROPRIETARY AND CONFIDENTIAL

Newton Sub-Giga Specification Summary

※ This specification May varies depending on the installation environment and user scenario.

NEWTON SUB-GIGA SIZES	2.9”	4.2”	4.3” LED Picking	7.5”	11.6”
DIMENSION	86.0 x 41.3 x 13.1 mm 3.39 x 1.63 x 0.52 inch	98.1 x 83.8 x 14.5 mm 3.86 x 3.30 x 0.57 inch	168.28 × 44.18 × 31.3 mm 6.63 × 1.74 × 1.23 inch	125 x 183 x 15.2 mm 4.92 x 7.2 x 0.60 inch	192 x 268 x 21.9 mm 7.60 x 10.60 x 0.86 inch
ACTIVE DISPLAY AREA	67.6 x 29.6 mm 2.66 x 1.17 inch	84.8 x 63.6 mm 3.33 x 2.50 inch	105.4 x 30.7 mm 4.15 x 1.21 inch	163.2 x 97.9 mm 6.43 x 3.86 inch	163.0 x 244.5 mm 6.43 x 9.62 inch
RESOLUTION(Pixel)	384 x 168	400 x 300	522 x 251	800 x 480	640 x 960
PIXEL DENSITY	144 dpi	120 dpi	125 dpi	126 dpi	100 dpi
DISPLAY TECHNOLOGY	Full Graphic E-Ink Display				
PIXEL COLORS	BW or BWR				
VIEWING ANGLE	Nearly 180°				
USABLE PAGES	Up to 7 pages		Up to 3 pages		
OPERATING TEMPERATURE	0 ~ 40°(32 ~ 104°F)				
BATTERY	CR2450 x 2	CR2450 x 2	CR2450 x 2	CR2450 x 4	AA x 4
BATTERY LIFETIME	Up To 5 years (1 Update/day) ※ 3 years in 0°~10°	Up To 5 years (1 Update/day) ※ 3 years in 0°~10°	Up To 5 Years (2 Update &100 led blinking /Day) ※ 3 years in 0°~10°	Up To 5 years (1 Update/day) ※ 3 years in 0°~10°	Up To 5 years (1 Update/day) ※ 3 years in 0°~10°
ENCRYPTION	128-Bit AES				
COMPLIANCE	CE, ROHS, FCC				
NFC	FeliCa NFC Forum Type 3	FeliCa NFC Forum Type 3	MIFARE® NFC Forum Type 2	FeliCa NFC Forum Type 3	FeliCa NFC Forum Type 3
WATERPROOF	IP67	IP67	IP55	IP67	IP67
BUTTON	2 Buttons	2 Buttons	3 Buttons	2 Buttons	2 Buttons
LED	7 Colors(Red/Green/Blue/Yellow/Cyan/Magenta/White)				
ESL OPERATING FREQUENCY	Sub-Giga (863~868MHz)				
WIRELESS FIRMWARE UPDATE	Yes				

© 2022 SOLUM PROPRIETARY AND CONFIDENTIAL

2.9 inch

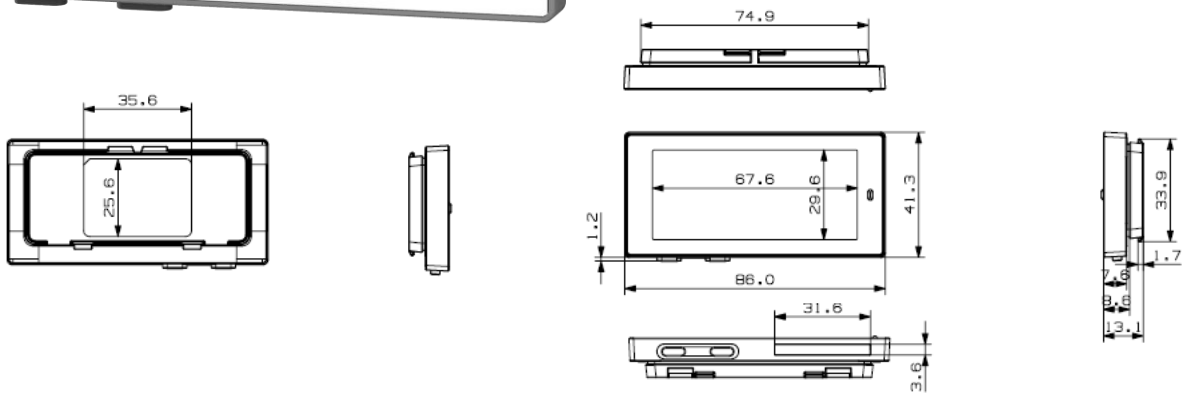

DIMENSION	86.0 × 41.3 × 13.1 mm / 3.38 × 1.62 × 0.51 inch
ACTIVE DISPLAY AREA	67.6 × 29.6 mm / 2.66 × 1.16 inch
RESOLUTION (Pixel)	384 × 168
PIXEL DENSITY	144 dpi
DISPLAY TECHNOLOGY	Full Graphic E-ink Display
BEZEL COLOR	White or Black, Customizable Color(Optional)
PIXEL COLORS	BW / BWR / BWY
VIEWING ANGLE	Nearly 180˚
USABLE PAGES	Up to 7 pages
OPERATING TEMPERATURE	0 ~ 40℃ (32 ~ 104℉)
BATTERY	CR2450 × 2ea
BATTERY LIFETIME	Up To 5 years (2 Update/day) ※ 3 years in 0°~10°
ENCRYPTION	128-Bit AES
COMPLIANCE	CE, RoHS, FCC
NFC	FeliCa NFC Forum Type 3
WATERPROOF	IP67
BUTTON	2 Buttons
LED	7 Colors (Red/Green/Blue/Yellow/Cyan/Magenta/White)
ESL OPERATING FREQUENCY	Sub-Giga (863~868MHz / 902~928MHz)
WIRELESS FIRMWARE UPDATE	Yes

※ This specification May varies depending on the installation environment and user scenario.

© 2020 SOLUM PROPRIETARY AND CONFIDENTIAL

4.2 inch

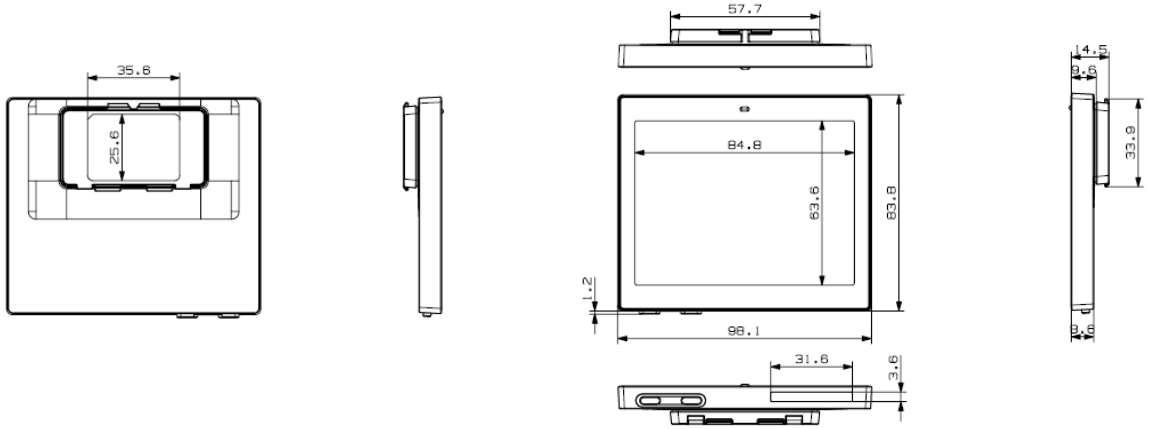

DIMENSION	98.1 × 83.8 × 14.5 mm / 3.86 × 3.29 × 0.57 inch
ACTIVE DISPLAY AREA	84.8 × 63.6 mm / 3.33 × 2.50 inch
RESOLUTION (Pixel)	400 × 300
PIXEL DENSITY	120 dpi
DISPLAY TECHNOLOGY	Full Graphic E-ink Display
BEZEL COLOR	White or Black, Customizable Color(Optional)
PIXEL COLORS	BW / BWR / BWY
VIEWING ANGLE	Nearly 180˚
USABLE PAGES	Up to 7 pages
OPERATING TEMPERATURE	0 ~ 40℃ (32 ~ 104℉)
BATTERY	CR2450 × 2ea
BATTERY LIFETIME	Up To 5 years (2 Update/day) ※ 3 years in 0°~10°
ENCRYPTION	128-Bit AES
COMPLIANCE	CE, RoHS, FCC
NFC	FeliCa NFC Forum Type 3
WATERPROOF	IP67
BUTTON	2 Buttons
LED	7 Colors (Red/Green/Blue/Yellow/Cyan/Magenta/White)
ESL OPERATING FREQUENCY	Sub-Giga (863~868MHz / 902~928MHz)
WIRELESS FIRMWARE UPDATE	Yes

※ This specification May varies depending on the installation environment and user scenario.

© 2020 SOLUM PROPRIETARY AND CONFIDENTIAL

4.3 inch LED Picking

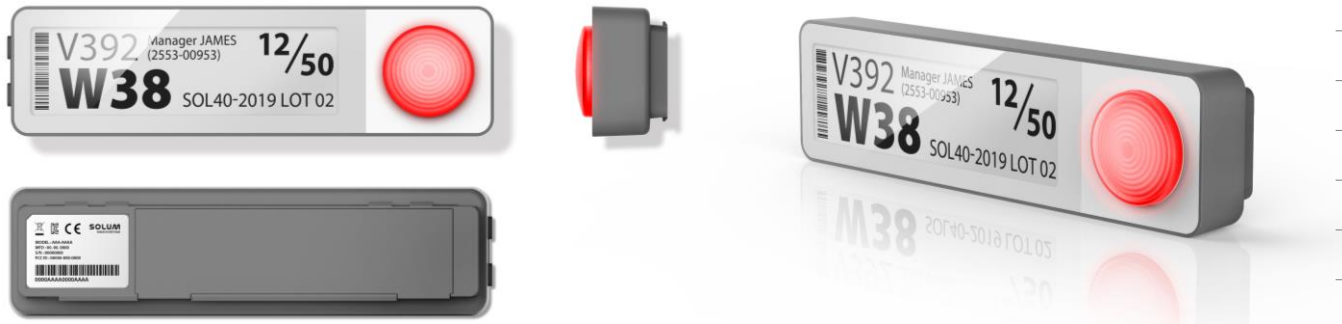

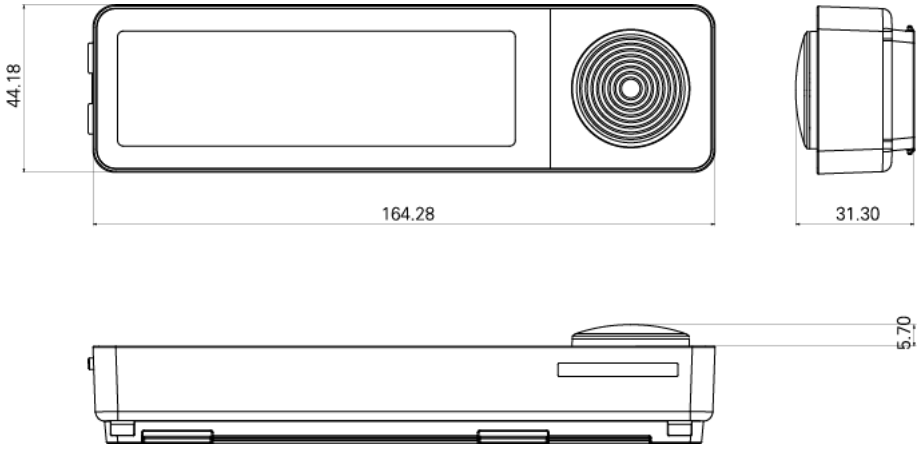

DIMENSION	164.28 × 44.18 × 31.30 mm / 6.46 × 1.73 × 1.23 inch
ACTIVE DISPLAY AREA	105.4 × 30.7 mm / 4.14 × 1.20 inch
RESOLUTION (Pixel)	522 × 152
PIXEL DENSITY	125 dpi
DISPLAY TECHNOLOGY	Full Graphic E-ink Display
BEZEL COLOR	White
PIXEL COLORS	BW / BWR
VIEWING ANGLE	Nearly 180˚
USABLE PAGES	Default: 3pages, Optional: Up to 7 Pages
OPERATING TEMPERATURE	0 ~ 40℃ (32 ~ 104℉)
BATTERY	AA × 4ea
BATTERY LIFETIME	Up To 5 Years (2 Update &100 led blinking /Day) ※ 3 years in 0°~10°
ENCRYPTION	128-Bit AES
COMPLIANCE	CE, RoHS
NFC	MIFARE® NFC Forum Type 2
WATERPROOF	IP66
BUTTON	3 Buttons
LED	7 Colors (Red/Green/Blue/Yellow/Cyan/Magenta/White)
ESL OPERATING FREQUENCY	Sub-Giga (863~868MHz / 902~928MHz)
WIRELESS FIRMWARE UPDATE	Yes

※ This specification May varies depending on the installation environment and user scenario.

© 2020 SOLUM PROPRIETARY AND CONFIDENTIAL

7.5 inch

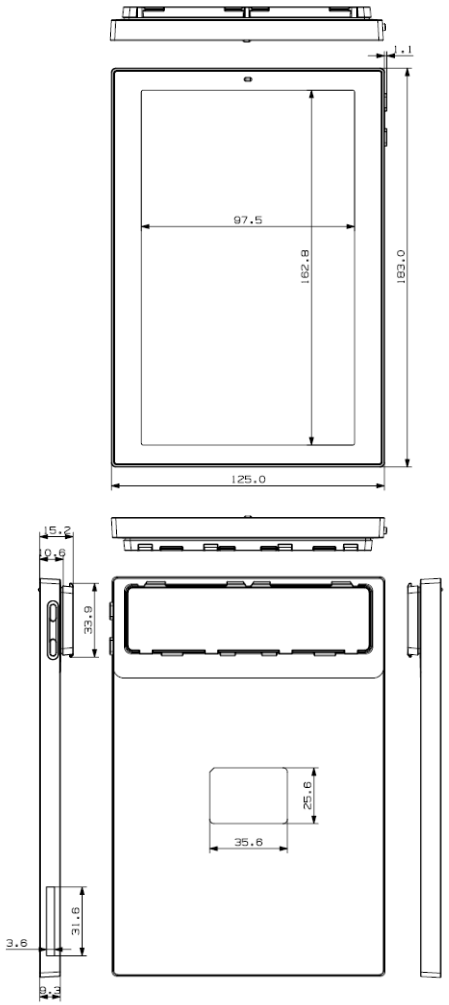

DIMENSION	125.0 × 183.0 × 15.2 mm / 4.92 × 7.20 × 0.59 inch
ACTIVE DISPLAY AREA	97.5 × 162.8 mm / 3.84 × 6.41 inch
RESOLUTION (Pixel)	800 × 480
PIXEL DENSITY	126 dpi
DISPLAY TECHNOLOGY	Full Graphic E-ink Display
BEZEL COLOR	White or Black, Customizable Color(Optional)
PIXEL COLORS	BW / BWR
VIEWING ANGLE	Nearly 180˚
USABLE PAGES	Up to 3 pages
OPERATING TEMPERATURE	0 ~ 40℃ (32 ~ 104℉)
BATTERY	CR2450 × 4ea
BATTERY LIFETIME	Up To 5 years (1 Update/day) ※ 3 years in 0°~10°
ENCRYPTION	128-Bit AES
COMPLIANCE	CE, RoHS, FCC
NFC	FeliCa NFC Forum Type 3
WATERPROOF	IP67
BUTTON	2 Buttons
LED	7 Colors (Red/Green/Blue/Yellow/Cyan/Magenta/White)
ESL OPERATING FREQUENCY	Sub-Giga (863~868MHz / 902~928MHz)
WIRELESS FIRMWARE UPDATE	Yes

※ This specification May varies depending on the installation environment and user scenario.

© 2020 SOLUM PROPRIETARY AND CONFIDENTIAL

11.6 inch

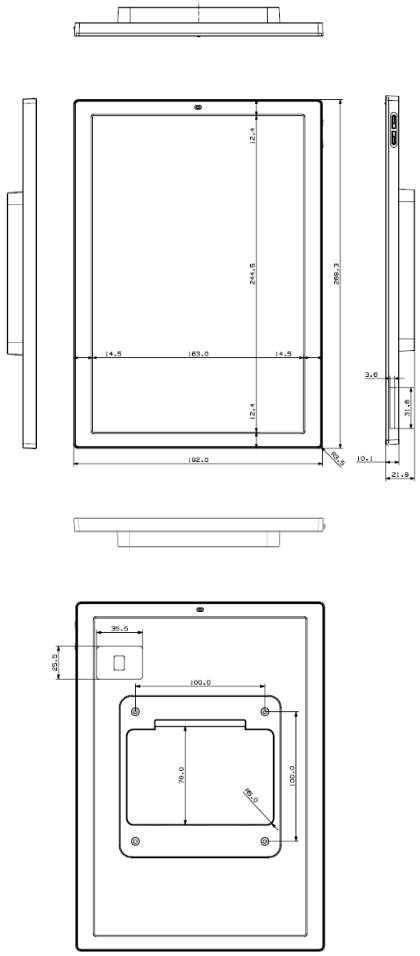

DIMENSION	192.0 × 269.3 × 21.9 mm / 7.56 × 10.60 × 0.86 inch
ACTIVE DISPLAY AREA	163.0 × 244.5 mm / 6.41 × 9.62 inch
RESOLUTION (Pixel)	640 × 960
PIXEL DENSITY	100 dpi
DISPLAY TECHNOLOGY	Full Graphic E-ink Display
BEZEL COLOR	White or Black, Customizable Color(Optional)
PIXEL COLORS	BW / BWR / BWY
VIEWING ANGLE	Nearly 180˚
USABLE PAGES	Up to 3 pages
OPERATING TEMPERATURE	0 ~ 40℃ (32 ~ 104℉)
BATTERY	AA × 4ea
BATTERY LIFETIME	Up To 5 years (1 Update/day) ※ 3 years in 0°~10°
ENCRYPTION	128-Bit AES
COMPLIANCE	CE, RoHS, FCC
NFC	FeliCa NFC Forum Type 3
WATERPROOF	IP67
BUTTON	2 Buttons
LED	7 Colors (Red/Green/Blue/Yellow/Cyan/Magenta/White)
ESL OPERATING FREQUENCY	Sub-Giga (863~868MHz / 902~928MHz)
WIRELESS FIRMWARE UPDATE	Yes

※ This specification May varies depending on the installation environment and user scenario.

© 2020 SOLUM PROPRIETARY AND CONFIDENTIAL

THANK YOU

joshua@solu-m.com
010-4094-7979

SOLUM
Solution provider.

2022 SOLUM PROPRIETARY AND CONFIDENTIAL