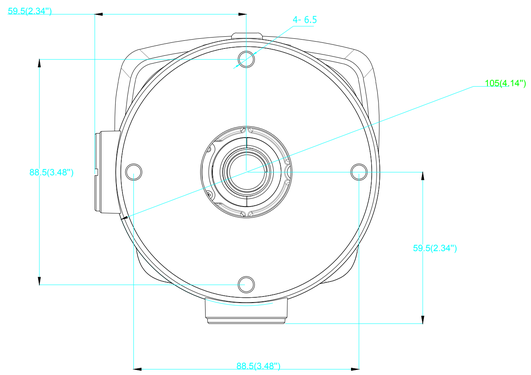

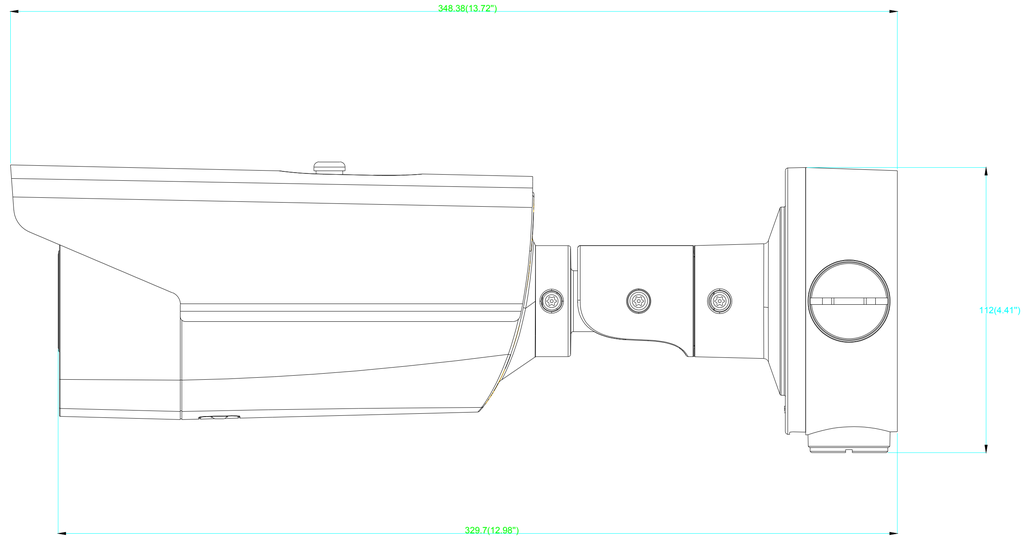

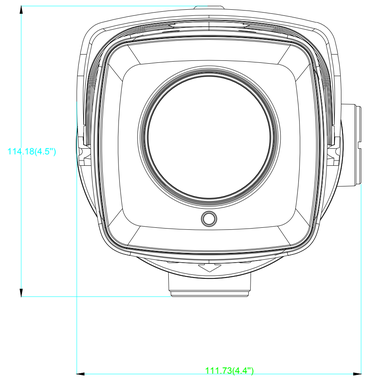

<1>							
NO. REV						AREA BY	DATE
DESIGN		PART NAME:	PART NO:				
APPROVED		DWG NO:	REV:	STATE:			
STANDARD		MATERIAL:	WEIGHT:	GRADE:	FIRST ANGLE	SCALE SIZE:	A1
MCODE		FINISH:	FIRST_USED_ON			1:1	SHEET 1 OF 1

DWG NO: